COMPA TECH. Srl - Italy
41012 - Carpi (MO)
Tel: (+39) 059.527887
Fax: (+39) 059.527889
www.compasaw.com
info@compasaw.com
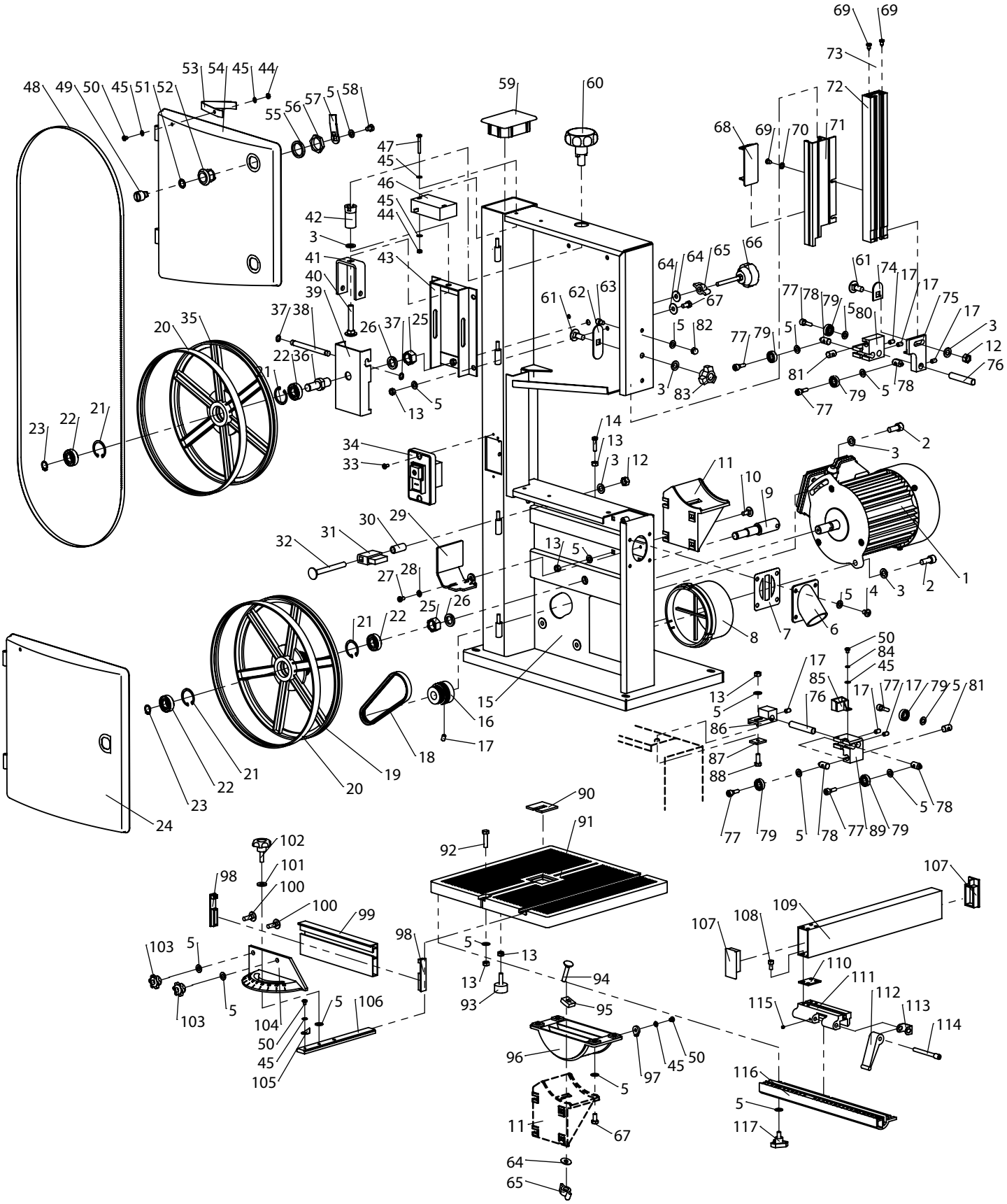
BS250B