COMPA s.r.l. 41011 Campogalliano (MO) ITALIA Tel. (+39) 059527887
Fax (+39) 059527889 E-mail: info@compasaw.com Http://www.compasaw.com

Super Professional
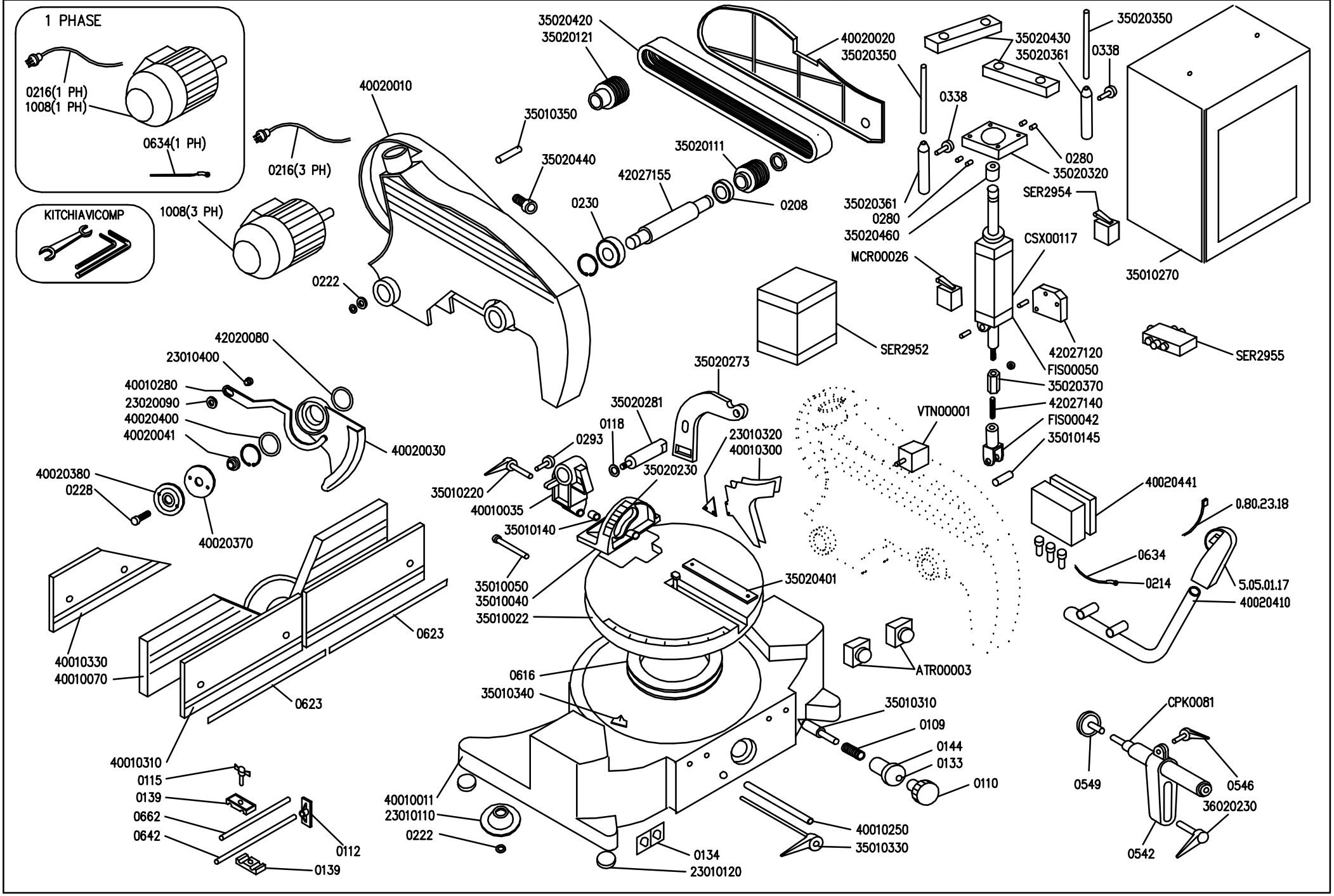
Mod. 4000P
Tav. es011_01